INSTALLATION TIPS - DUCT MOUNTING

DUCT SIDE: mountings shown are typical. Detectors can be installed side, bottom or top of duct as long as proper tube operation and flow/pressure performance is maintained.
DETECTOR ORIENTATION: SL-2000-P can be mounted either horizontally or vertically.
DUCT MATERIAL: Please check with your AHJ before installing on duct board. APC suggests a piece of sheet metal secured to the duct board, between the duct detector and the duct work.

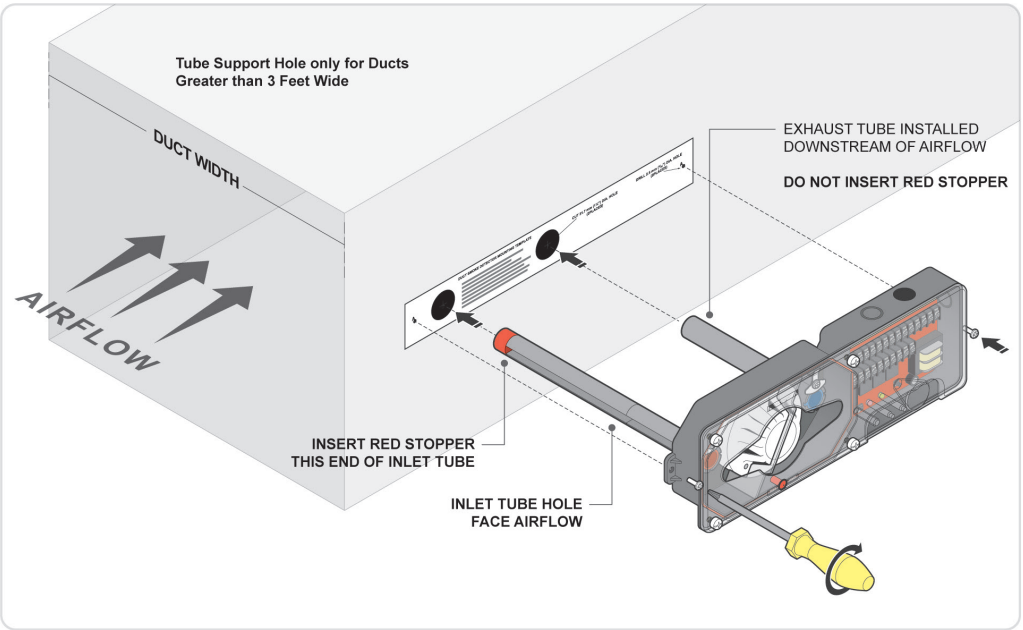

DUCT PREPARATION

Remove mounting template from the installation kit. Remove paper backing from the mounting template and affix it to the duct at the desired location. Using the template as a guide, drill (2) mounting holes, 3/32” (2.5mm) for the #12 X ½” sheet metal screws packaged in the installation kit. Drill or punch (2) 1¼” (32mm) holes for inlet sampling and exhaust tubes, using the template as a guide. Clean all holes.

MOUNTING

After securing the sampling and exhaust tubes to the duct smoke unit, (or initially placing the tubes through the 1¼” holes drilled or punched in the HVAC duct to accept the inlet sampling and exhaust tubes and then attaching them to the duct unit), hold the duct unit assembly in position and use (2) # 12 X ½” sheet metal screws (packaged in the installation kit) to secure the duct smoke detector to the HVAC duct sheet metal.